SiPM-Counter

Versatile Pulse Counter for SiPM-Detectors

SiPM-Counter with USB, 50mm and 38mm crystals.

The SiPM-Counter provides fast counting for radiation detectors read out by an SiPM-array. It features built-in, programmable gain stabilization and performs many analysis functions on its 32-bit ARM M0+ micro-processor.

With advanced features such as sample vs background counting and a portal monitor mode, it can be the intelligent instrument core for low-cost products requiring very little development time.

Proprietary custom software embedded into the ARM processor is secure against read-back and reverse engineering.

Counter for SiPM

- USB power and control, 15 mA
- 32-bit ARM M0+ processor
- SiPM power supply with
- Precision analog output
- Digital trigger out
- Built-in data analysis
- Sample vs background counting
- Portal monitor alarm appliance
- Two-channel logger
- Time histogram

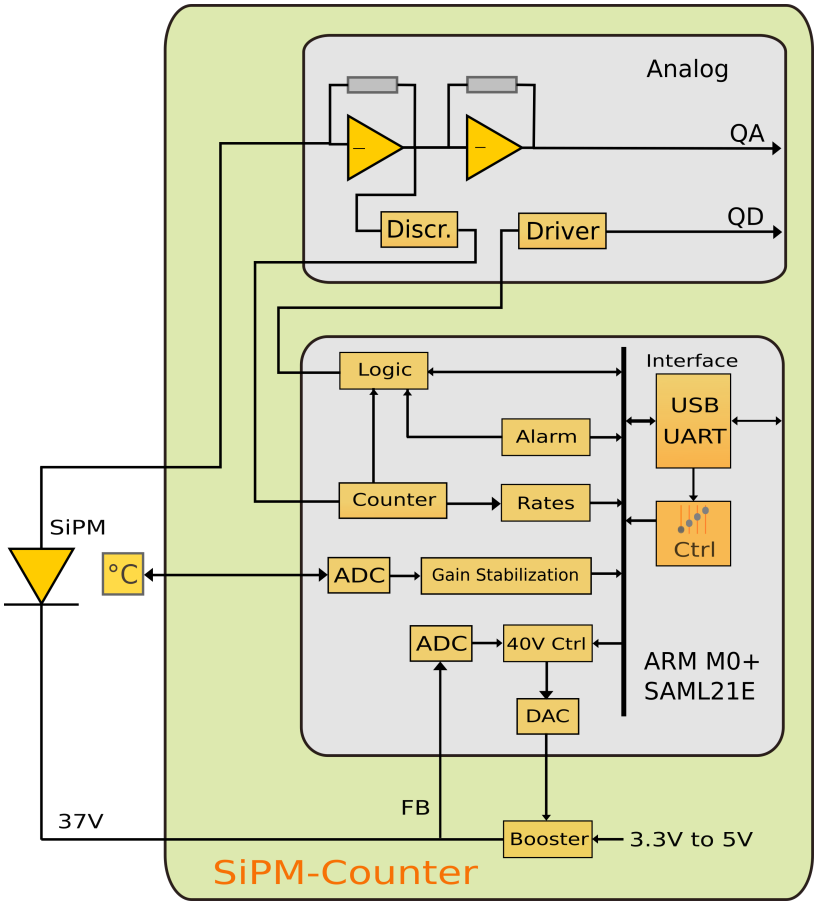

Analog

- Precision analog out, 0V – 3V
- I-to-V or 50µs tail pulse
- Digital gain stabilization
- Digital trigger out with adjustable threshold and pulse width.

Sample counting

- Measure sample and background count rate, with reported statistical errors
- Compute difference count rate
- Compute probability that sample rate is more than background
- Near loss-less counting with read-and-clear command.

Dynamic alarms

- Alarm on a passing source
- Compute alarm 10×/s
- Programmable latency, programmable false alarm rate
- Automatic background tracking
- Permanent or transient alarm

The SiPM-Counter is ideal for

- Mass-market low-cost gamma-ray detectors
- Integration into hand-held platforms for homeland security
- Detectors of radiometric probes
- Many pulsed-light counting applications

Ideal for embedded systems:

- Very low power consumption 5V@15mA=75mW
- USB or UART serial interface.

SiPM-Counter Summary

The SiPM-Counter is ideal for customers who are used to having a preamplifier integrated with their detector and want a smooth, no-risk path to migrate to a smart detector.

The SiPM-Counter can be operated via a serial interface from another microcontroller with as little as 384 bytes of RAM. In environments with a host computer (Linux or Windows, x64 or ARM), the SiPM-Counter becomes just another device on the bus and is accessible via open-source software from any programming language.

If there is no host computer, the SiPM-Counter has sufficient intelligence built in to provide even complex alarm functions completely autonomously.

The SiPM_Counter can compare sample vs background count rates and report the probability that the sample is more radioactive than the background.

The SiPM-Counter includes the capability to alarm on a passing radioactive source in a vehicle, or on a person walking by. Simply connect the digital output to an alarm indicator (LED or buzzer) and you have an incredibly low-cost instrument core for a sweeper, a backpack or even portal monitor.

Principle of operation

- Embedded ARM 32-bit SoC controls all aspects.
- Software-controlled gain stabilization via lookup tables of operating voltage vs temperature. Added trigger threshold vs temperature control is optional.
- Fast I-to-V amplifier creates countable pulses.

ARM M0+ Functions

- Control the 40V booster to power the SiPM
- Gain stabilization
- Measure count rates and statistical errors
- Compute alarm probabilities
- Compute portal monitor alarming

Security

- Embedded software can not be read back.
- Factory reset gain stabilization tables cannot be read back.
- Developer and user can program gain stabilization tables that cannot be read back.

SiPM operating voltage

- Fixed positive polarity
- Standard: Up to 36V applied to the SiPM

Server-side software

- Device communicates via USB on Windows and Linux; x86/x64 & ARM processors, using libusb0.1
- MCA Data Server is accessible from any programming language.
- JSON command interface
- TCP/IP communication via robust transport layer using ZeroMQ (zeromq.org).

Client software

- wxMCA graphical user interface on Windows and Linux
- Example clients in Python communicate with MCA Data Server via ZMQ
- User applications can be written in any programming language.
- API in Python
- Hardware simulator for try-before-you-buy.

Power supply

- Supply: 3.3V to 5.5V; 5V@15mA

Performance

- Counter dead time: min. 0.85µs, adjustable
- 1K arrival time histogram
- 2×1023-point chart recorder

Environmental

- Operational from -40°C to +60°C

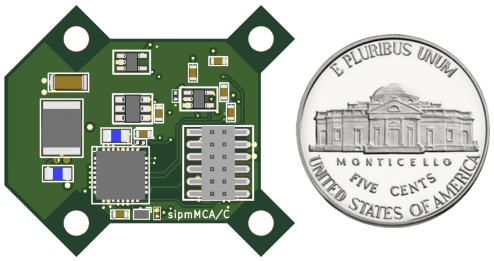

The SiPM-Counter PCB and the SiPM-1000 MCA have the same size and connectors and are software and pin compatible.

SiPM-Counter Capabilities	
Capability	***Description***
Analog	Factory-configurable options include charge-integrating preamplifier with 50µs tail pulse, or I-2-V converter. The standard configuration for QA is a positive going I-2-V converter with a 3V full scale range
Gain stabilization	The SiPM-Counter uses either built-in or user-programmable look up tables to adjust the SiPM operating voltage as a function of temperature. Non-standard embedded software may also adjust the trigger threshold as required by some scintillators.
Trigger	Both, the trigger threshold and the output pulse width are programmable.
Counter	The SiPM-Counter can count pulses in either of two active banks, one for samples to be measured and one for storing a background measurement. The device reports count rates and statistical 2-σ errors. Users can length the dead time, to avoid retriggering on the falling end of pulses from a slow scintillator.
Net Counter	The SiPM-Counter reports the difference between sample and background count rate together with the combined statistical 2-σ errors.
Analysis	The SiPM-Counter reports the probability that the measured sample count rate is compatible with the background count rate.
Dynamic alarming	The SiPM-Counter can analyze and report count rates in time slices of 100ms, ie at a rate of 10/s. The device automatically tracks slowly changing backgrounds and will alarm on a passing source. Its digital output can be used to drive an audio or visual alarm.
Two-channel Logger	The SiPM-Counter implements a 1023-point two-channel logger to record rapidly changing parameters in time steps as small as 50ms.
Time histogram	The SiPM-Counter can record a 1K histogram of the time since the last pulse, with a resolution of 1.33µs. This useful to prove that there are no periodic noise pulses interfering with the measurement. It also provides a model-independent way of accurately measuring the true input count rate – independent of assumed dead times.
Communication	The SiPM-Counter implements a USB-2.0 compatible USB 1.2 interface. It also offers a serial interface for use by a microcontroller. The SiPM-Counter can be operated by a device driver with just 384 bytes of RAM.

Count rate measurements

For negative-going output pulses, the SiPM-Counter can use a built-in discriminator to accomplish two tasks. For one, it can for each scintillator pulse create a digital output pulse and send that to a remote receiver. Given its strong line driver, and the fact that the output pulse width can be adjusted between 50ns and 1s, this feature allows to create a system that is very robust against electromagnetic interference from the outside.

Secondly, the discriminator trigger threshold can be software adjusted and the embedded ARM processor can count trigger pulses in real time. The feature is used to establish two alternative counters for count rate measurement. Typically, one may be used to establish a background count rate, while the other is used to measure a current sample. The SiPM-Counter not only reports the count rates, but also the statistical uncertainty of the measurement.

In addition, there is built-in software to compare sample count rate against the background count rate and compute the statistical probability that the sample counts are caused by the same activity as the established background rate.

The developer can set an alarm threshold and let the trigger output of the SiPM-Counter indicate an alarm when the sample is decidedly more radioactive than the background.

Time-slice operation

There are dynamic situations, where a radioactive source can be measured only for a brief moment. Examples are a vehicle passing through a radiation portal monitor, or a person with a backpack detector walking past a stationary source.

The built-in time-slice software tracks slow changes in the environmental background. An alarm is created when during a summation time (L) of typically 4 seconds, the accumulated counts are significantly more than what is expected from the background. The alarm threshold is defined as the probability that the measured counts (N) during a period L, could have

been caused by the established background rate over the same period (B). A threshold of 1.0e-4 means that we alarm when P(Counts ≥ N|BCK) < 1.0e-4.

For example, assume a summation time of 4 seconds and a background rate of 500cps for BCK=2000. Now assume that we count 2500cps in a particular 4s-period. The probability of the established background to cause 2224 counts or more in 4s is P(Counts ≥ 2224|BCK=2000) = 2.86e-7. This is smaller than the alarm threshold of 1.0e-4, and the embedded program will generate an alarm.

If the alarm condition is permanent, the software resets all the logic after a period of H time slices and starts counting again. It now will accept the higher level of radioactivity as the new normal background.

All told, the time-slice firmware provides an unprecedented, and highly configurable, but fully autonomous alarming system for portal monitors. This is ideal for very low-cost mass-produced pedestrian monitors, hand-held sweepers and similar applications.